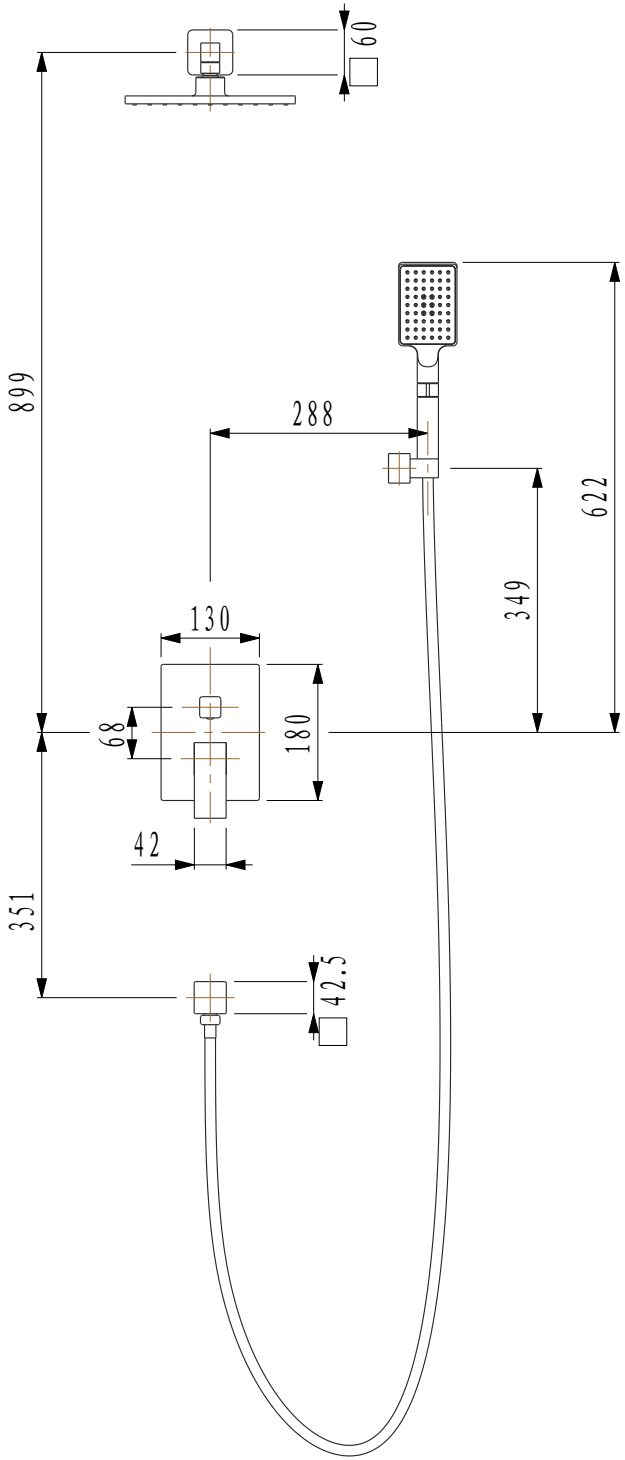
60
899
288
622
349
130
68
180
42
351
42.5

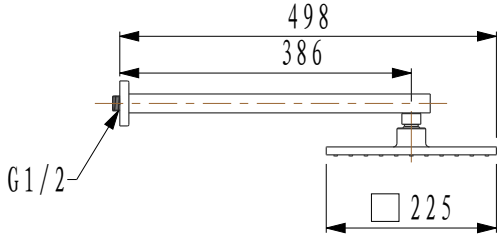
498
386
G1/2
225

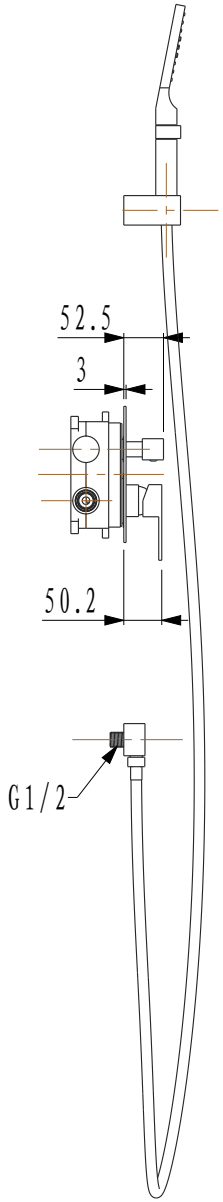
52.5
3
50.2
G1/2