Product:	**KLUDI E2 single lever bath and shower mixer DN 15, floor standing for free standing bath tubs**
Ref.:	**495900575**

Product description

single lever bath and shower mixer DN 15
floor standing for free standing bath tubs
solid lever
ceramic cartridge with hot water safety device
s-pointer aerator M 24 x 1
automatic diverter: shower to bath tub
shower connection 1/2 inch
protected against backflow
with hand shower KLUDI A-QA 1 S
with KLUDI SUPARAFLEX SILVER shower hose
1/2 x 1/2 x 1250 mm with anti twist
without pre-installation set for free standing bath/shower mixer
KLUDI FLEXX.BOXX item no. 88088

Finishes:
05 chrome

Advertisement

single lever bath/shower pillar mixer, manufacturer KLUDI GmbH & Co KG
KLUDI E2 item no. 495900575
type: single lever bath and shower pillar mixer, DN 15 / PN 10, finishes 05 = chrome plated brass, metal solid lever, ceramic cartridge K-41 with hot water safety device, bath tub filler with aerator s-pointer M 24 x 1, flow rate at bath tub filler 22,5 l/min at 3 bar, flow rate at shower outlet 15,5 l/min, automatic diverter: shower to bath tub, protected against backflow DIN EN 1717, with plastic hand shower KLUDI A-QA 1 S, with cleaning system, with volume spray, with KLUDI SUPARAFLEX SILVER shower hose 1/2 x 1/2 x 1250 mm, metal-effect (silver), with anti twist, shower connection 1/2 inch,
dimensions: height: 820 mm, nozzle projection: 211 mm, nozzle height: 742 mm, diameter cover plate: 150 mm
Suitable for pre-installation set KLUDI FLEXX.BOXX DN 20 item no. 88088
for free standing bath and shower mixer, not included.

Product picture

Dimensional drawing

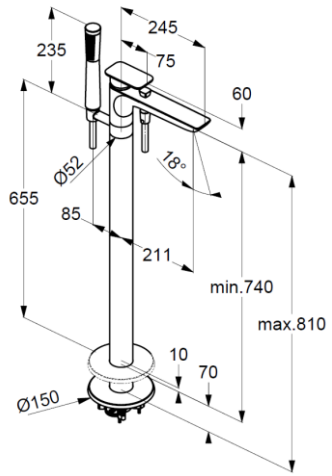

Flow rate diagram